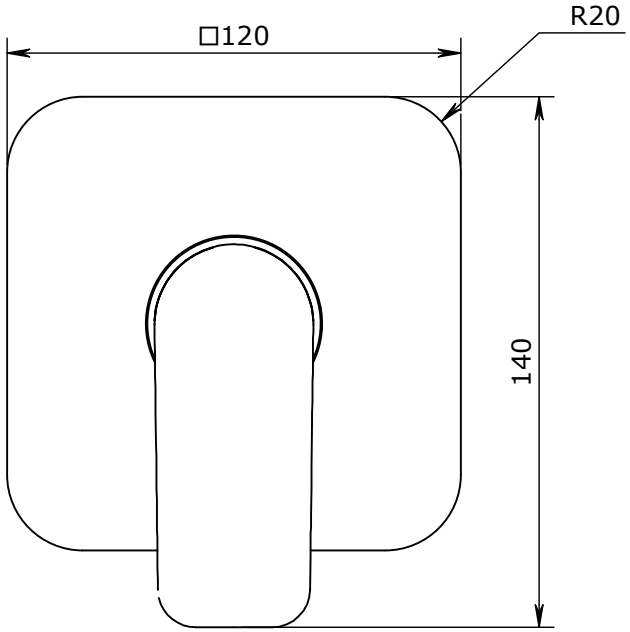
□120
R20
140

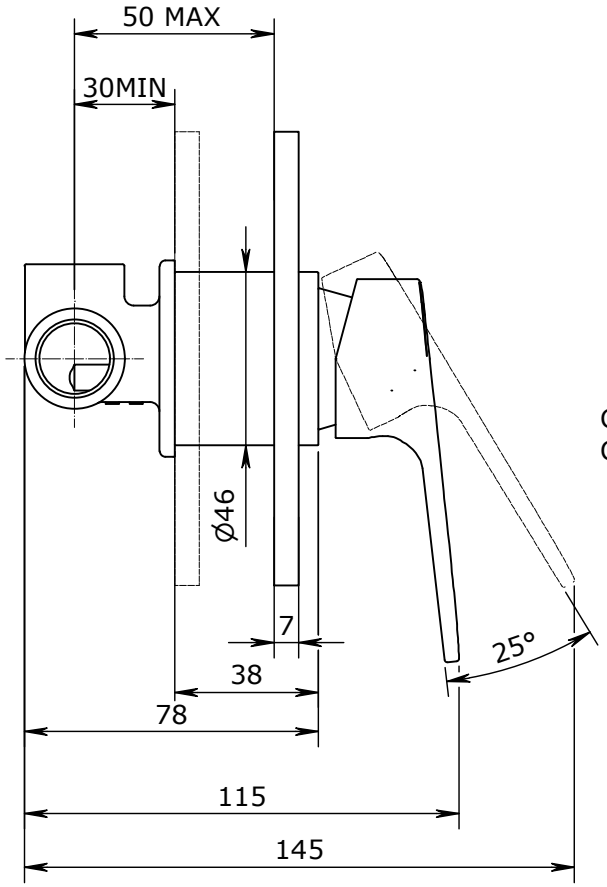
50 MAX
30MIN
Ø46
7
38
78
115
145
25°

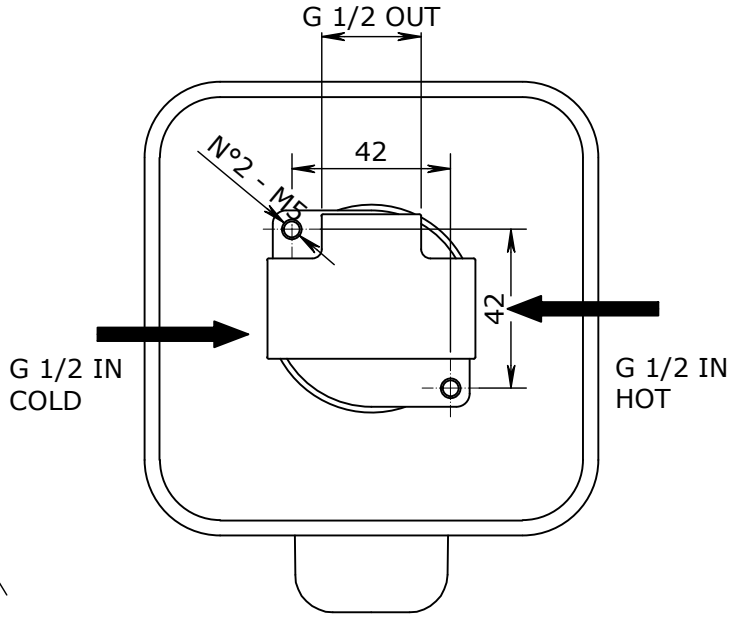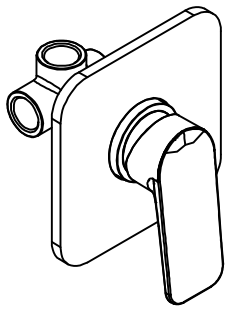
G 1/2 OUT
42
N°2 - M5
42
G 1/2 IN
COLD
G 1/2 IN
HOT